2000 lbs CAPACITY

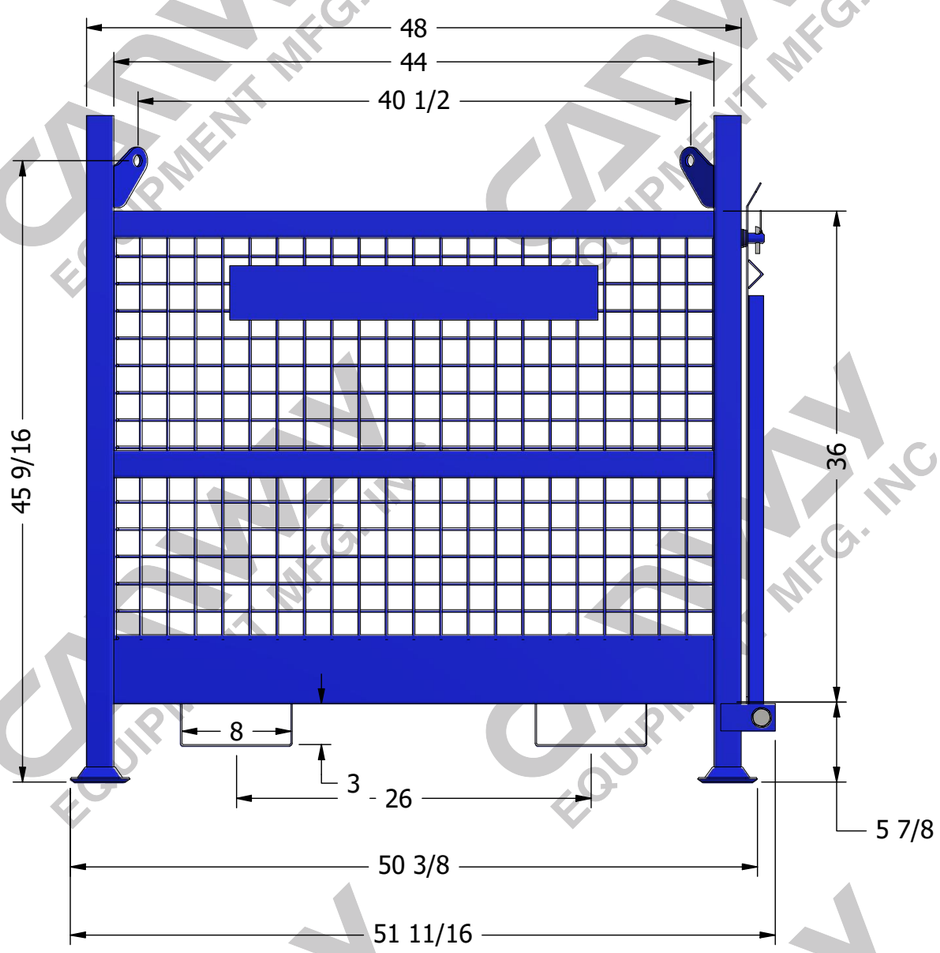

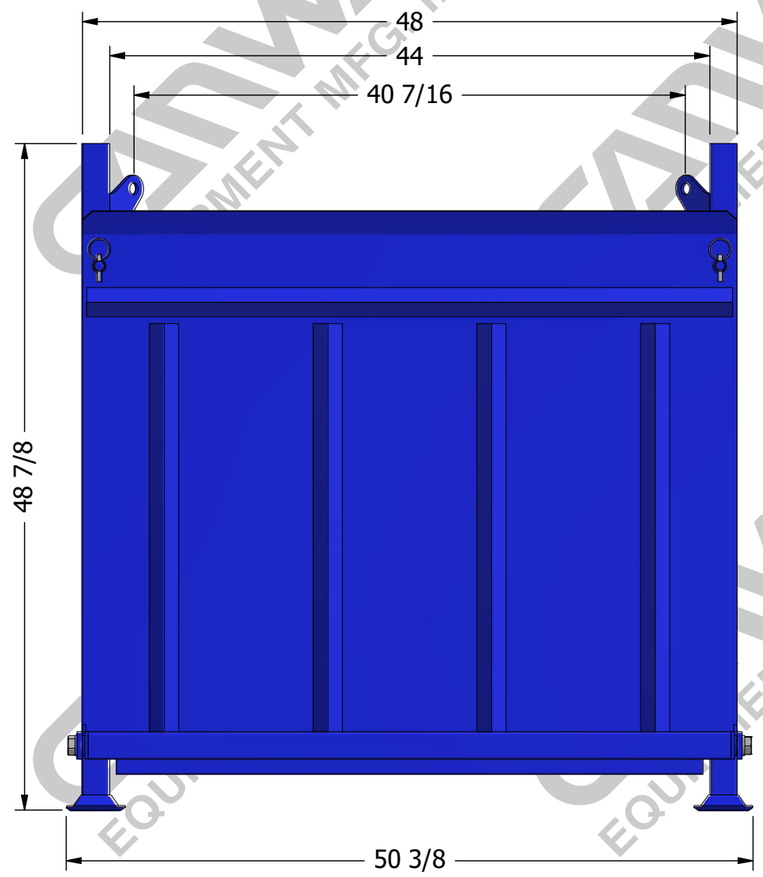

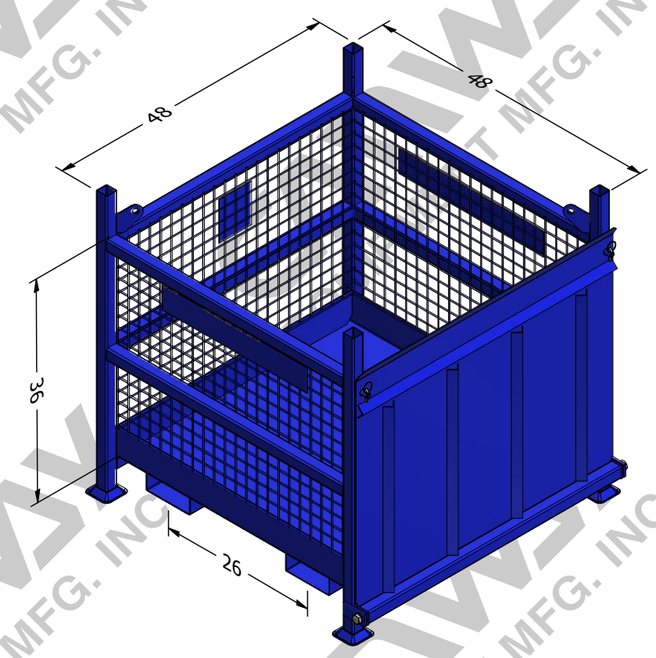

CANWAY EQUIPMENT MFG. INC.
WWW.CANWAYEQUIPMENT.COM SALES@CANWAYEQUIPMENT.COM
TEL: (905) 578-2929 FAX: (905) 578-5820
399 KENORA AVENUE, HAMILTON, ONTARIO L8E 2W3

Date: 1/26/2026	Part #	LB-M2-48-48-36-R-CF

X:\CANWAY DRAWING\CANWAY JOB\NET\AutoDesk Files\LIFT BIN NET\LB-M2-48X48X36-R-CF-NET.idw