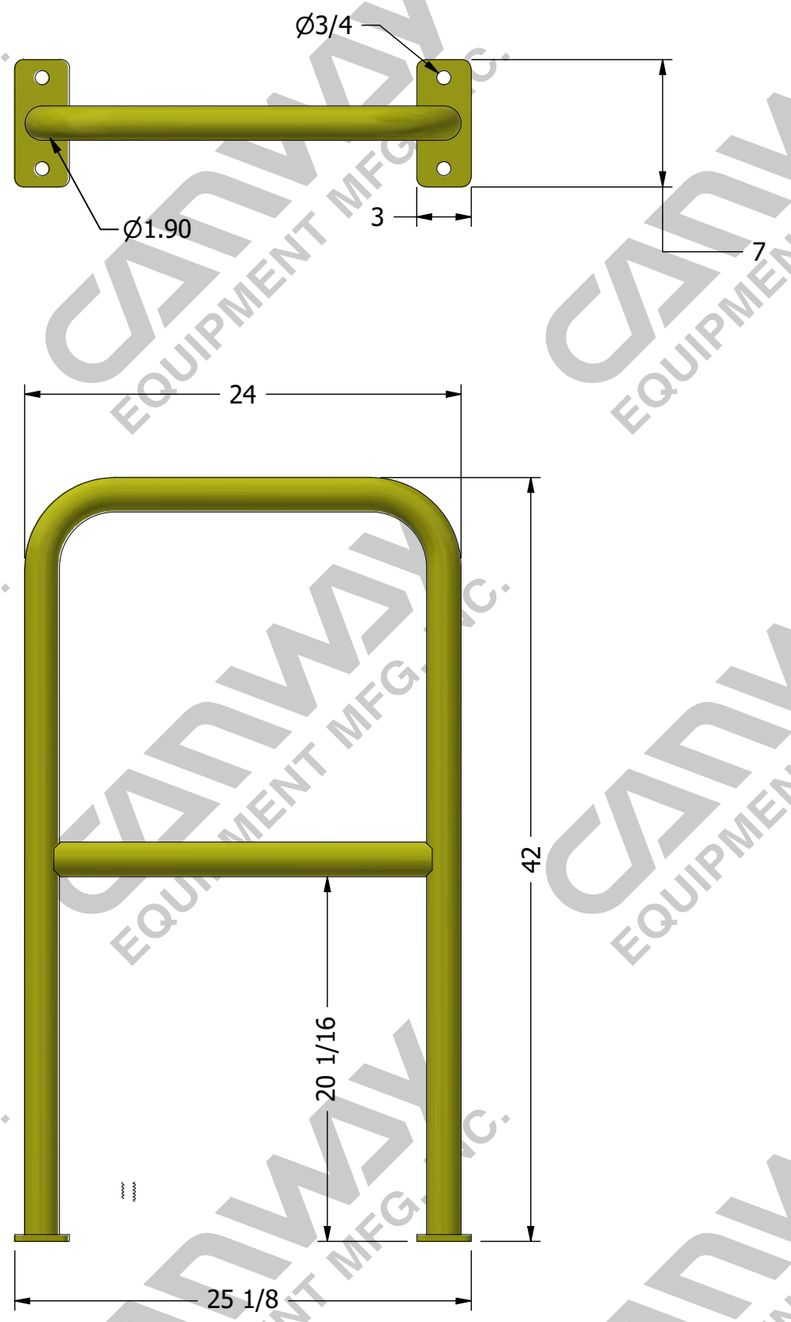

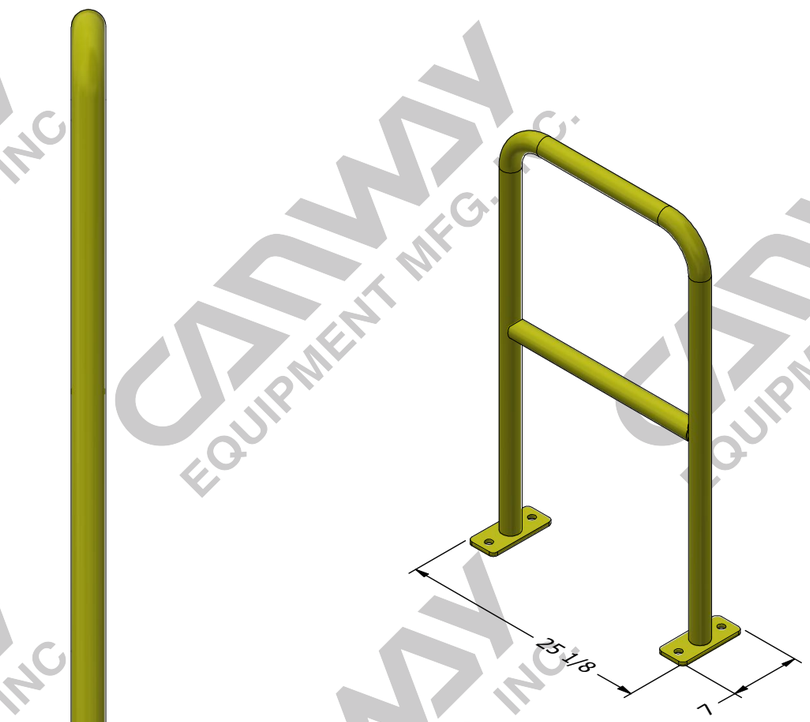

CANWAY EQUIPMENT MFG. INC.
WWW.CANWAYEQUIPMENT.COM SALES@CANWAYEQUIPMENT.COM
TEL: (905) 578-2929 FAX: (905) 578-5820
399 KENORA AVENUE, HAMILTON, ONTARIO L8E 2W3

Date: 10/20/2025	Part #	HR24

X:\CANWAY DRAWING\CANWAY JOB\NET\AutoDesk Files\HANDRAIL\HR-24-NET.idw

Confidential information

This drawing information and the intellectual property contained hereon is private and confedential. It is exclusive property of Canway Equipment Mfg. Inc and may not be passed on to third parties. Reproduction in whole or part is strictly prohibited without written permission from an Authorized Canway Officer. This information is protected by Copyright, Patent and other Laws