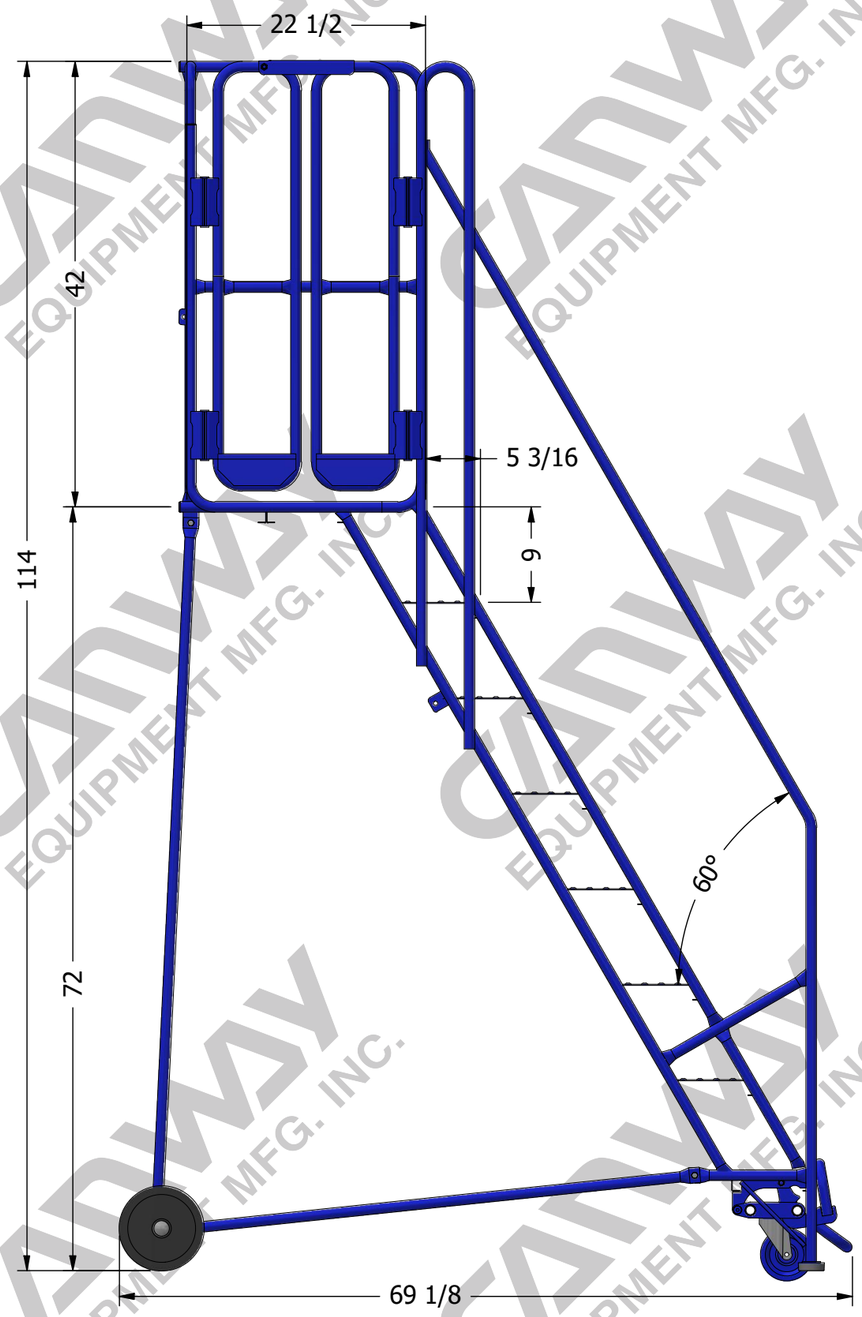

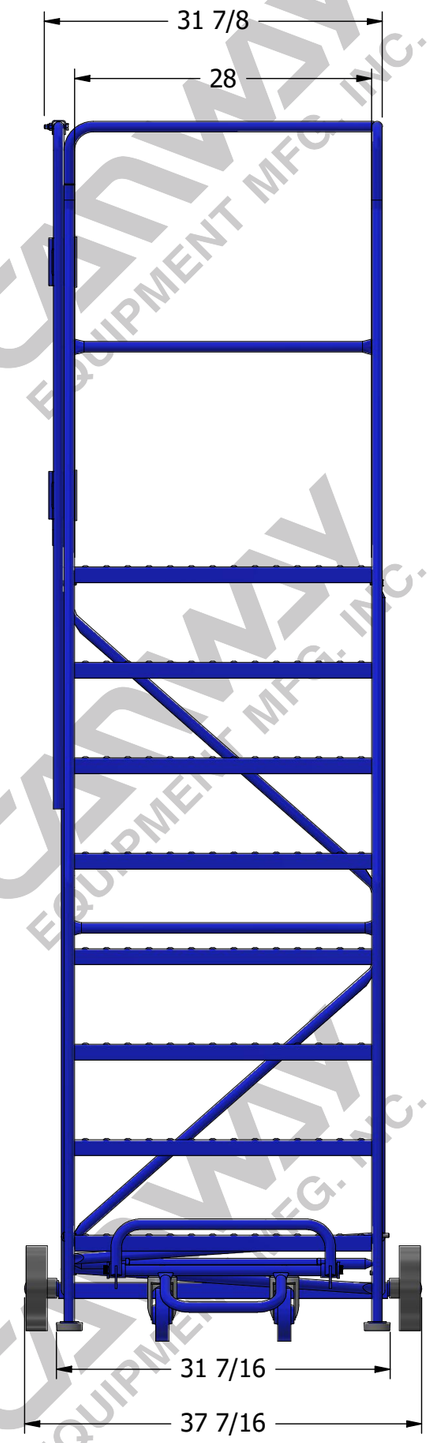

CANWAY EQUIPMENT MFG. INC.
WWW.CANWAYEQUIPMENT.COM SALES@CANWAYEQUIPMENT.COM
TEL: (905) 578-2929 FAX: (905) 578-5820
399 KENORA AVENUE, HAMILTON, ONTARIO L8E 2W3

Date: 1/8/2026	Part #	8H-LWT-DG

X:\CANWAY DRAWING\CANWAY JOB\NET\AutoDesk Files\LADDER NET\H STYLE\H\H\8H-LWT-DG-NET.idw