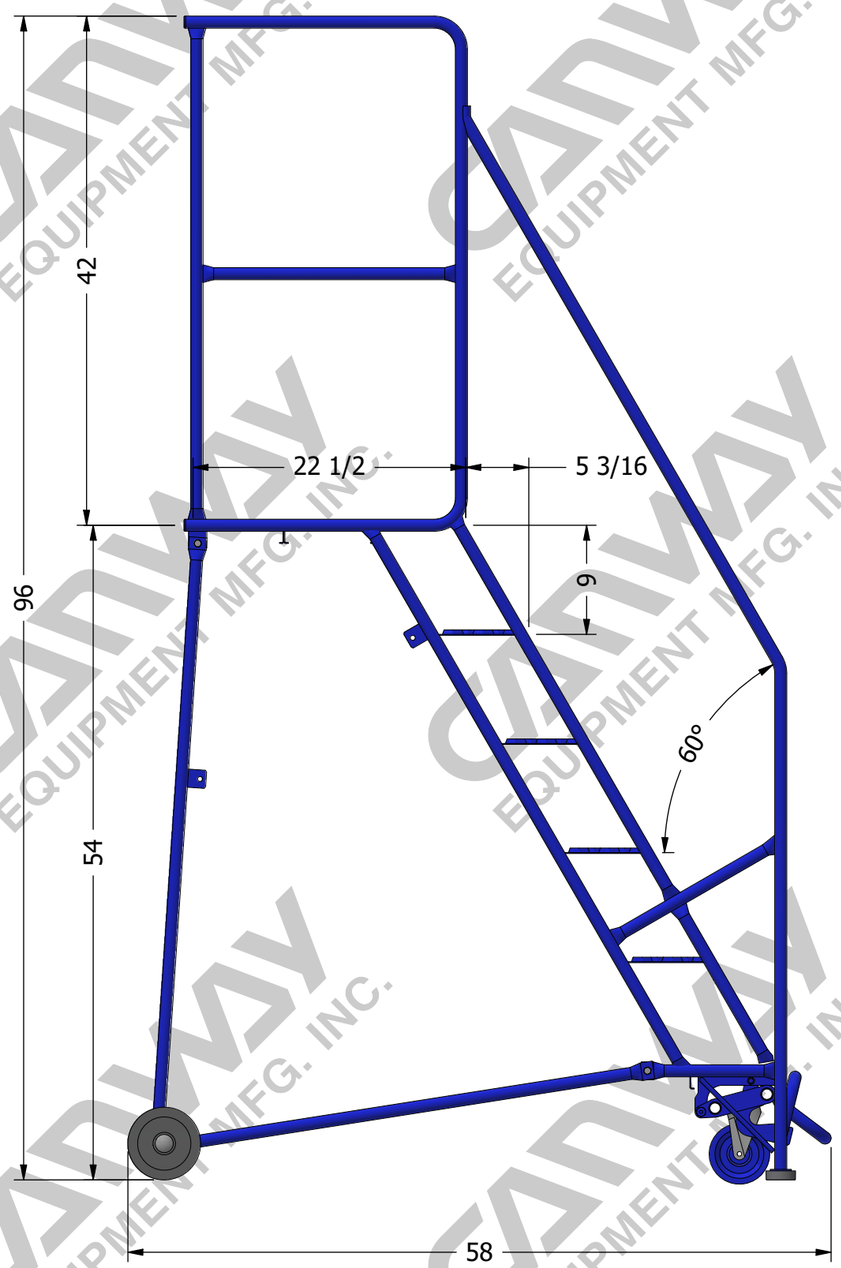

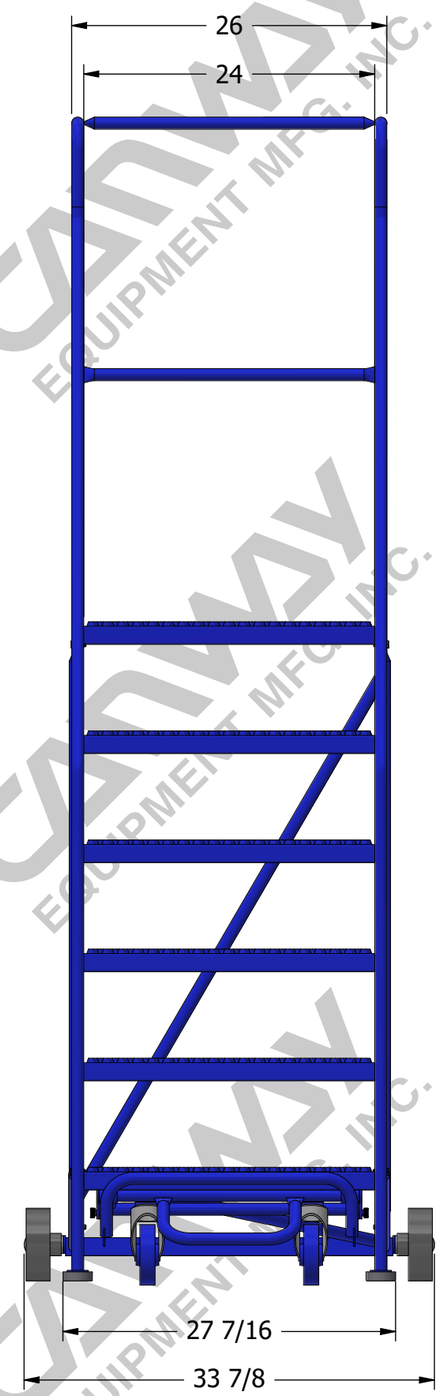

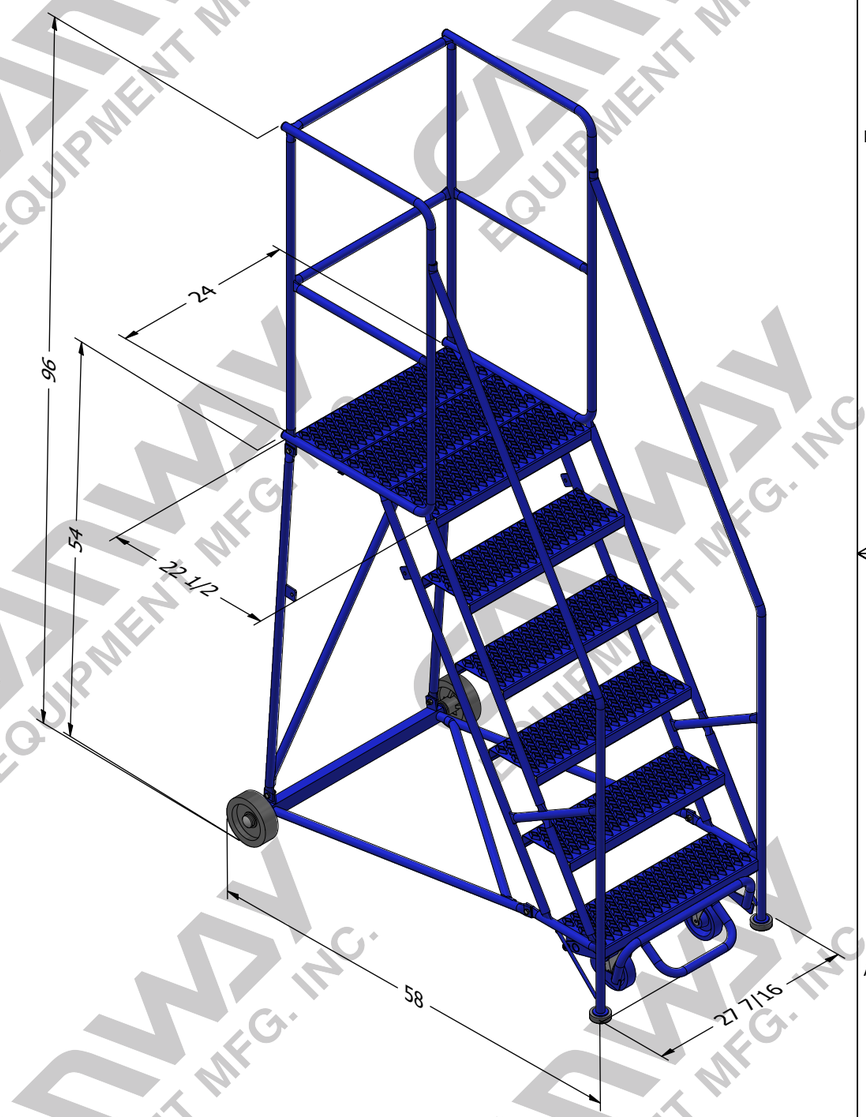

CANWAY EQUIPMENT MFG. INC.
WWW.CANWAYEQUIPMENT.COM SALES@CANWAYEQUIPMENT.COM
TEL: (905) 578-2929 FAX: (905) 578-5820
399 KENORA AVENUE, HAMILTON, ONTARIO L8E 2W3

Date: 12/4/2023 Part # **6H-EXT-22.5-DCG**

X:\CANWAY DRAWING\CANWAY JOB\NET\AutoDesk Files\LADDER NET\H STYLE\H\H\6H-EXT-22.5-DCG-NET.idw