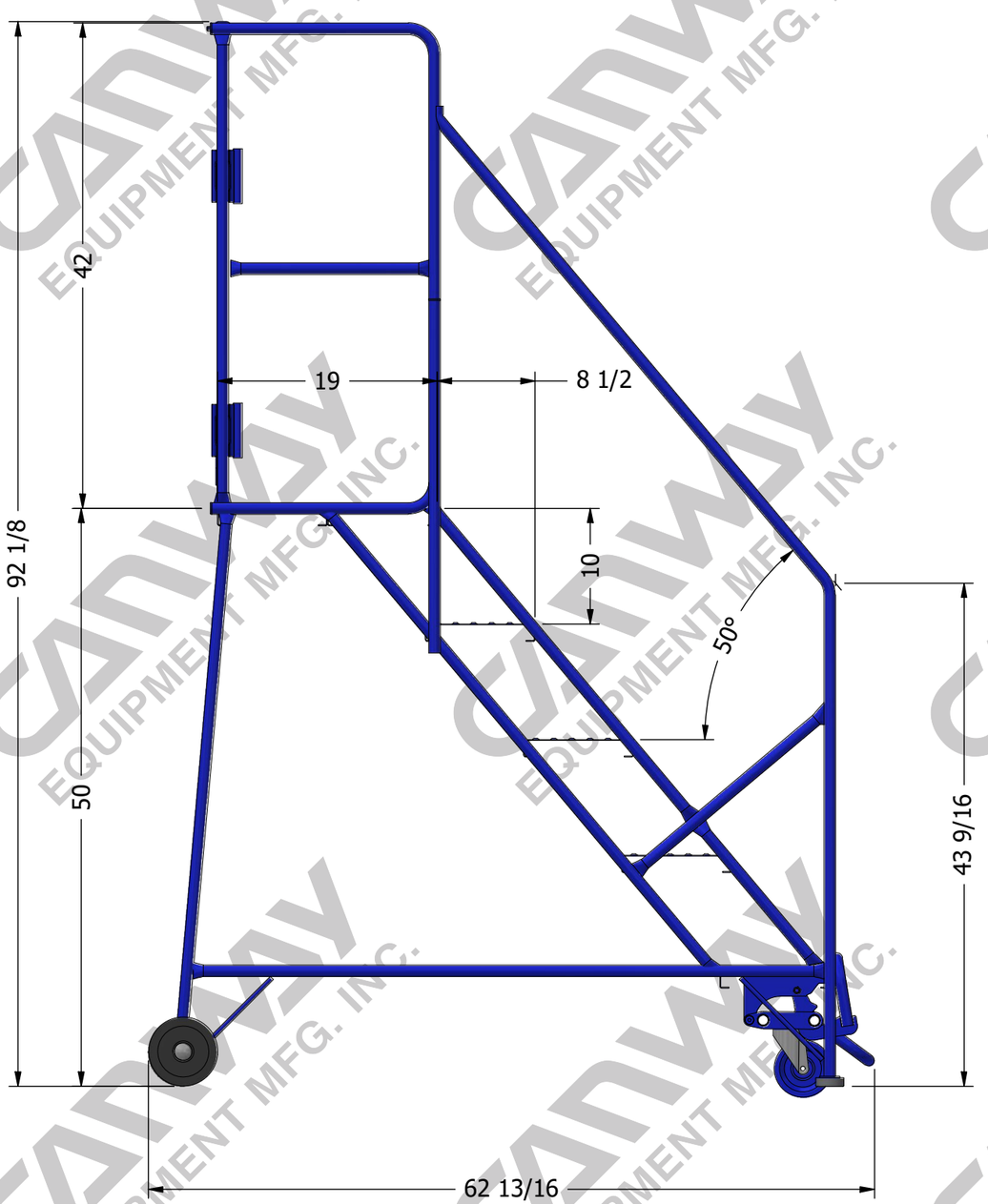

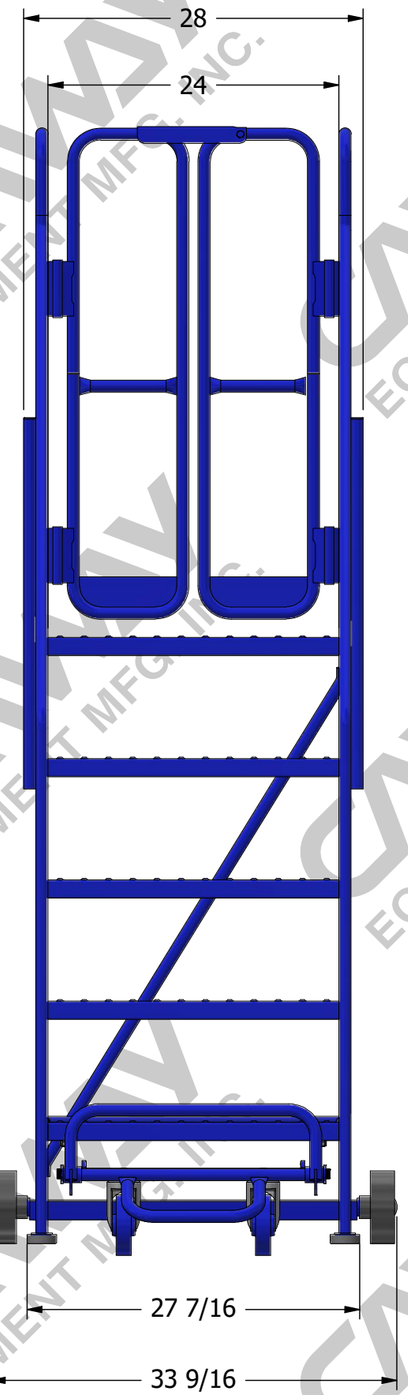

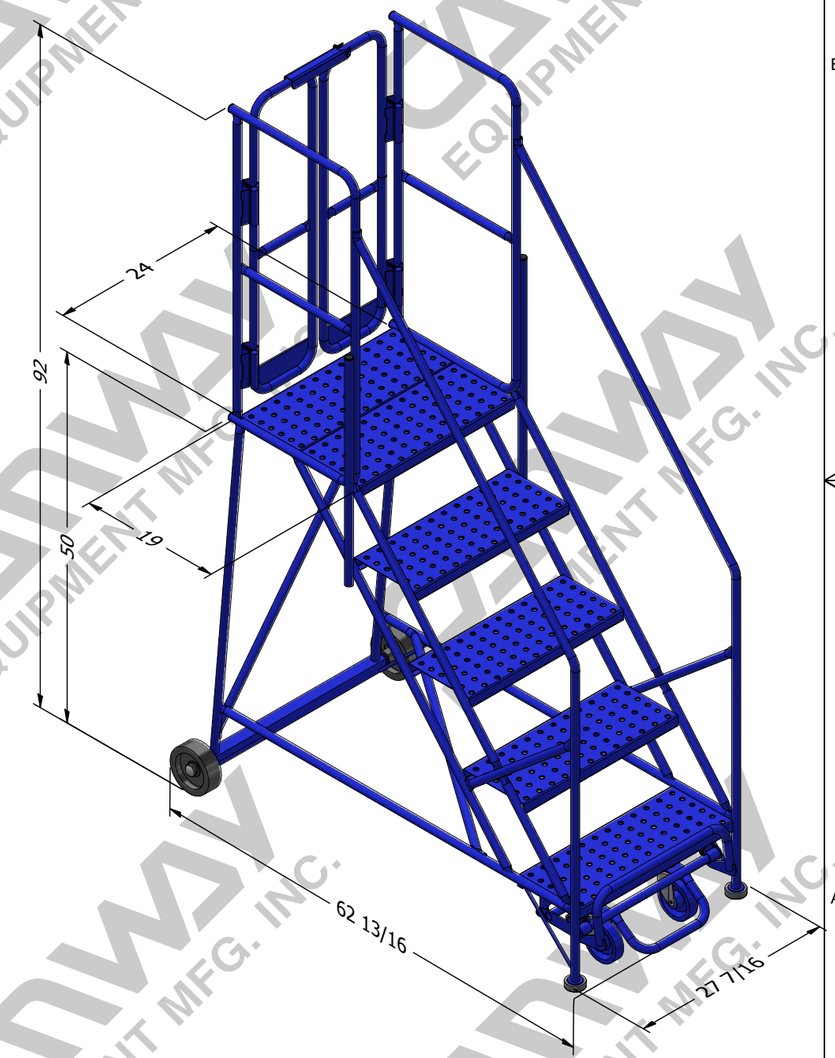

CANWAY EQUIPMENT MFG. INC.
WWW.CANWAYEQUIPMENT.COM SALES@CANWAYEQUIPMENT.COM
TEL: (905) 578-2929 FAX: (905) 578-5820
399 KENORA AVENUE, HAMILTON, ONTARIO L8E 2W3

Date: 7/28/2025 | Part # | **5SH-FWT-DG**

X:\CANWAY DRAWING\CANWAY JOB\NET\AutoDesk Files\LADDER NET\SH STYLE\SH\SH\5SH-FWT-DG-NET.idw