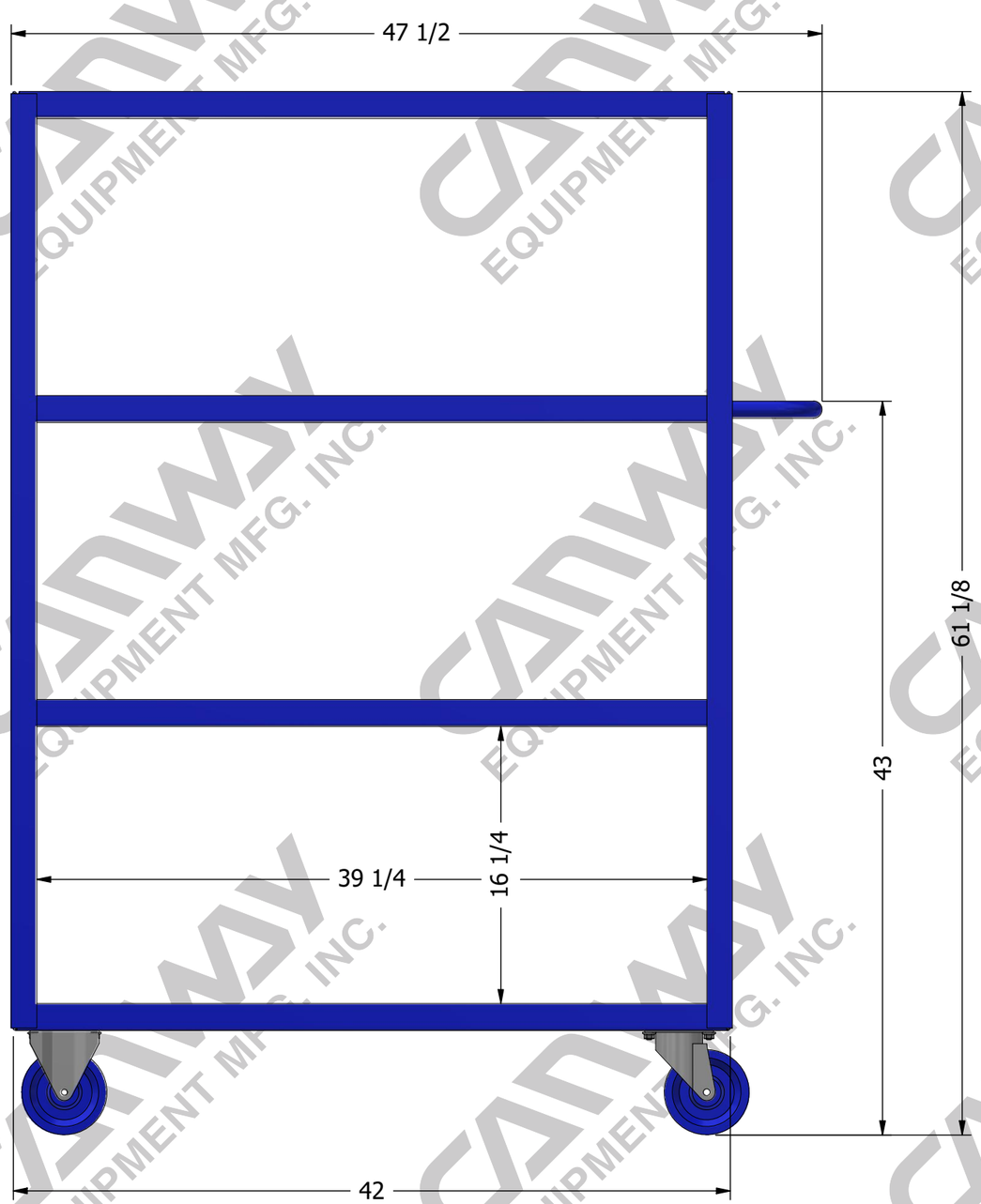

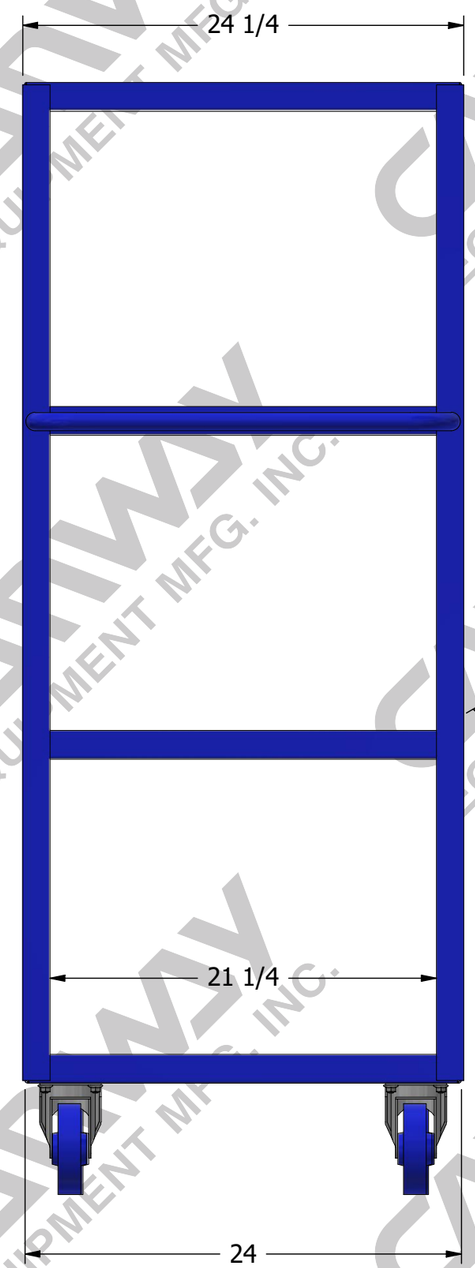

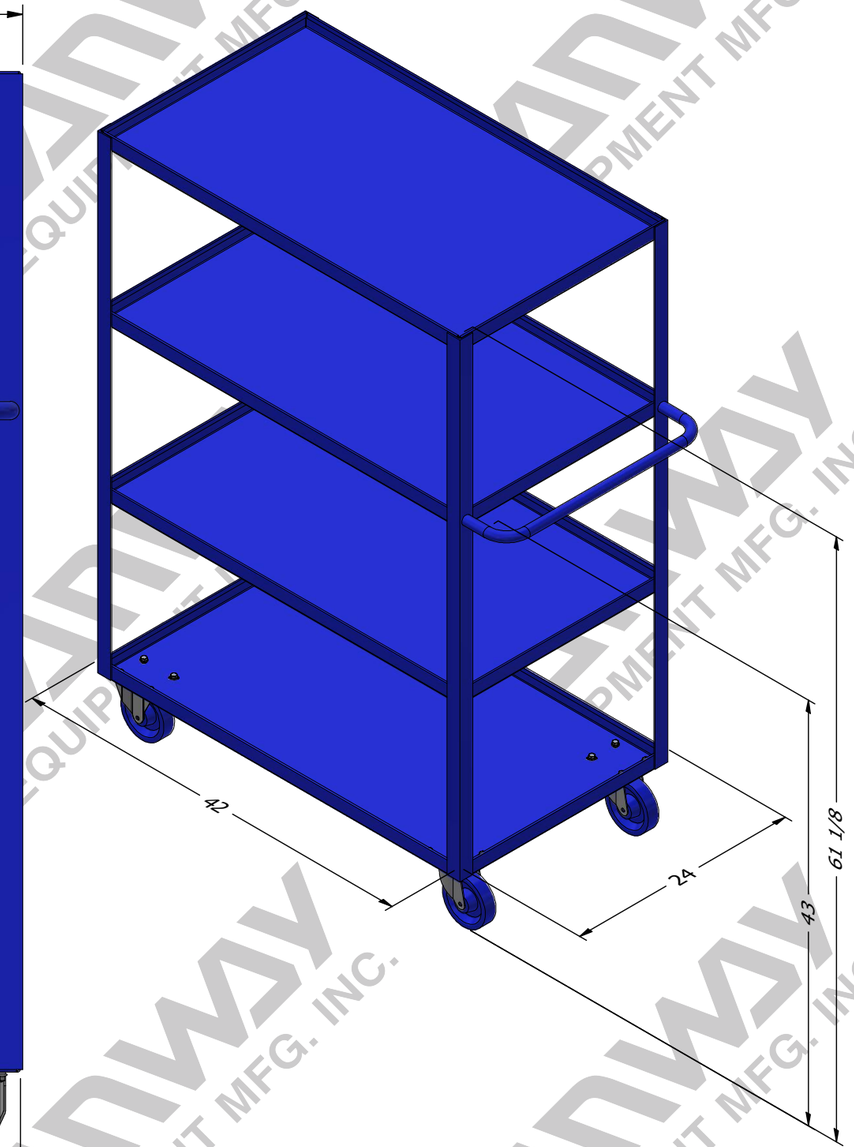

CANWAY EQUIPMENT MFG. INC.
WWW.CANWAYEQUIPMENT.COM SALES@CANWAYEQUIPMENT.COM
TEL: (905) 578-2929 FAX: (905) 578-5820
399 KENORA AVENUE, HAMILTON, ONTARIO L8E 2W3

Date: 11/24/2025 | Part # | **24X42-SC4-5RSX-U**

X:\CANWAY DRAWING\CANWAY JOB\NET\AutoDesk Files\CARTS AND BENCHES NET\24X42-SC4-5RSX-U-NET.idw