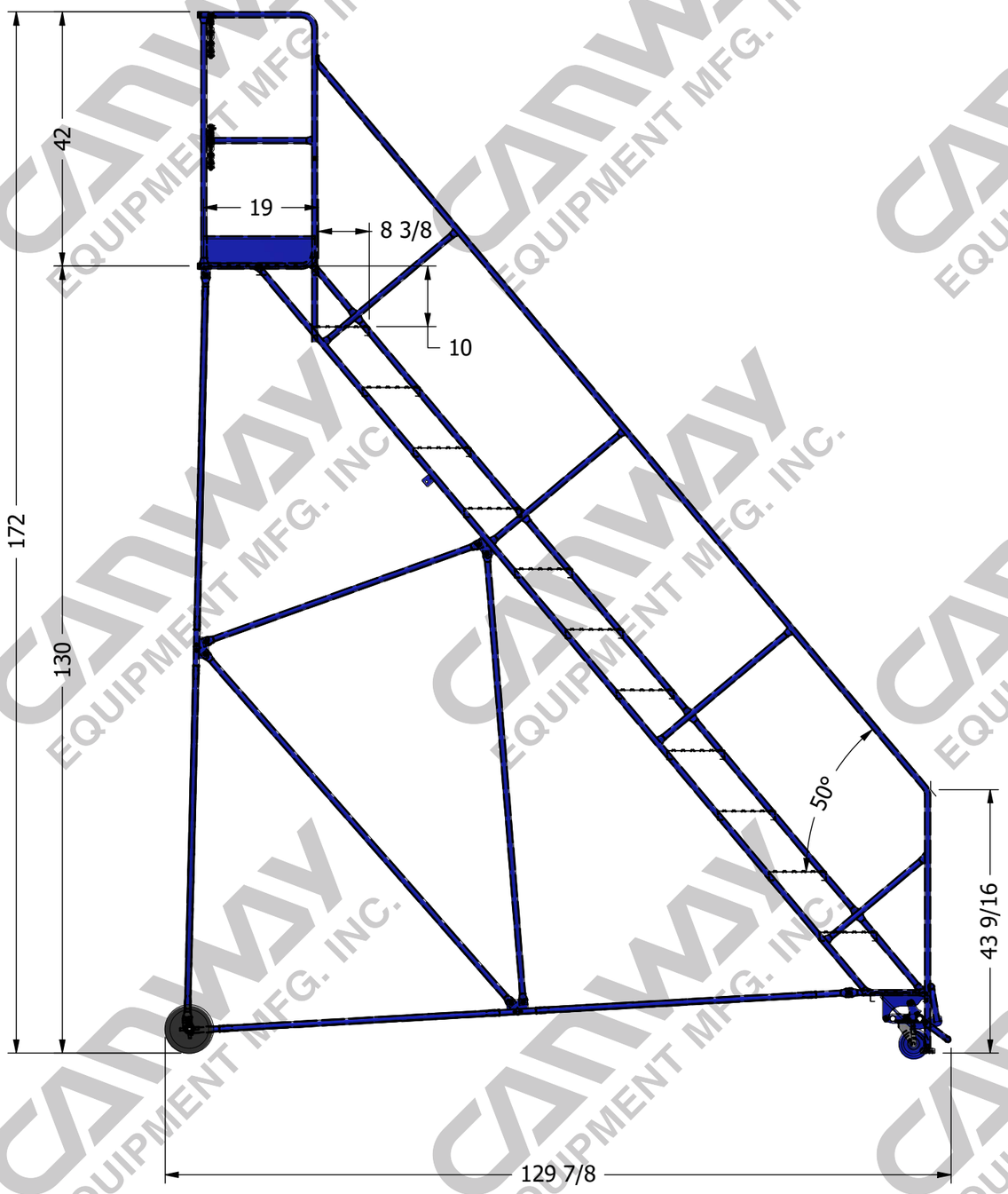

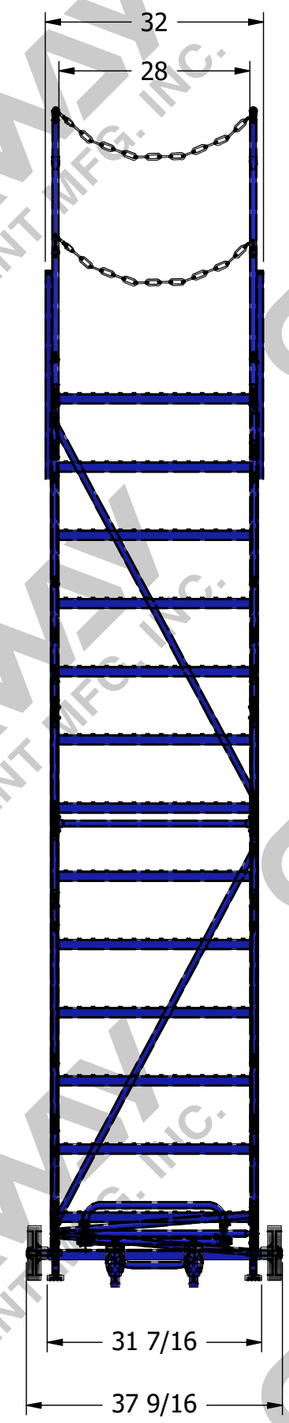

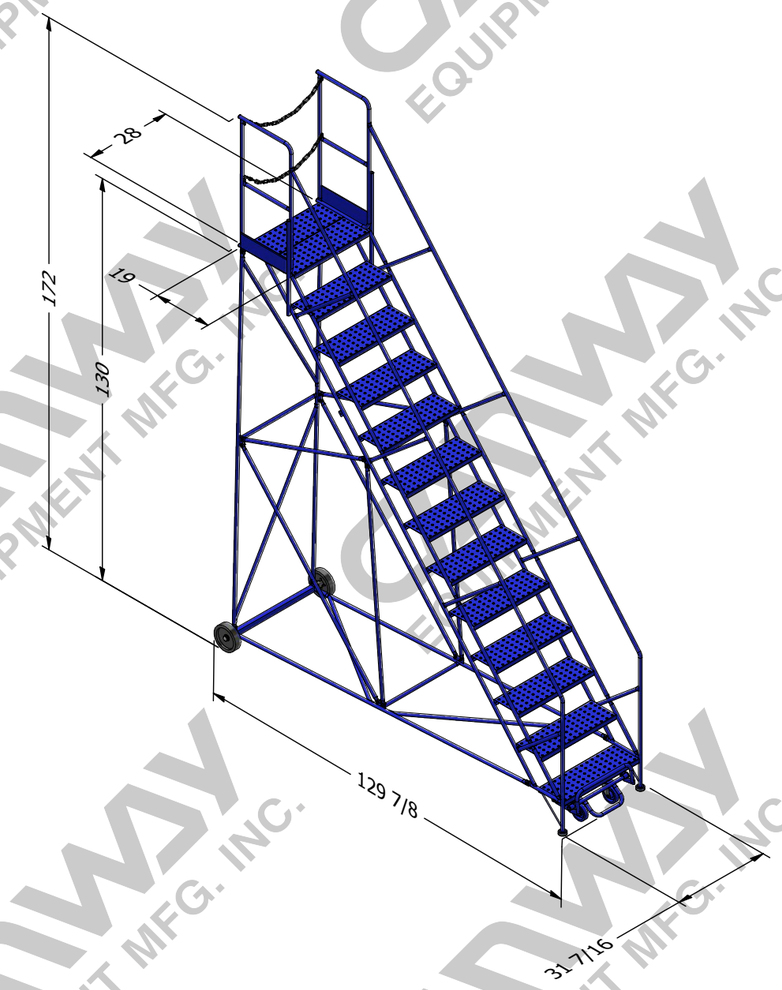

CANWAY EQUIPMENT MFG. INC.
WWW.CANWAYEQUIPMENT.COM SALES@CANWAYEQUIPMENT.COM
TEL: (905) 578-2929 FAX: (905) 578-5820
399 KENORA AVENUE, HAMILTON, ONTARIO L8E 2W3

Date: 7/25/2025 | Part # | **13SH-FWT-C**

X:\CANWAY DRAWING\CANWAY JOB\NET\AutoDesk Files\LADDER NET\SH STYLE\SH\SH\13SH-FWT-C-NET.idw