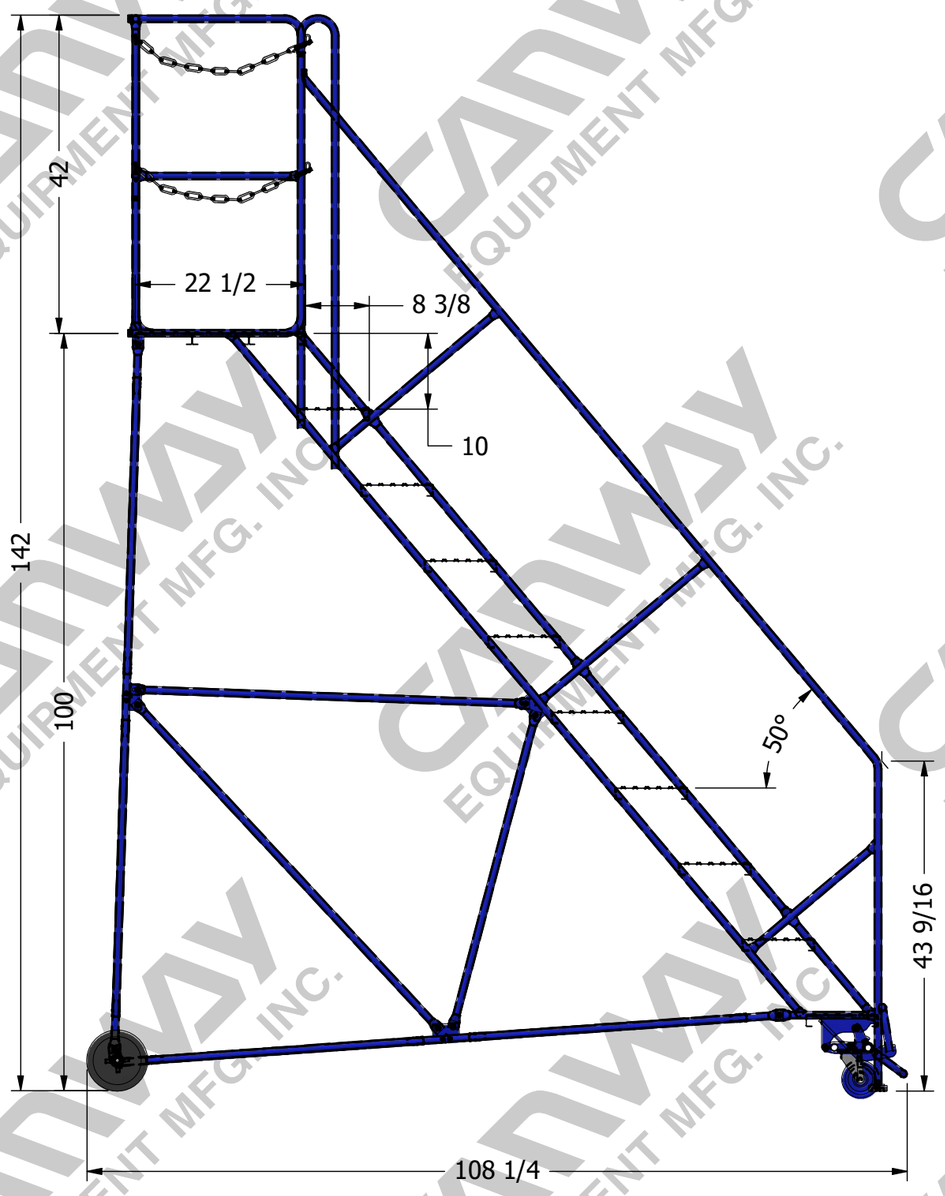

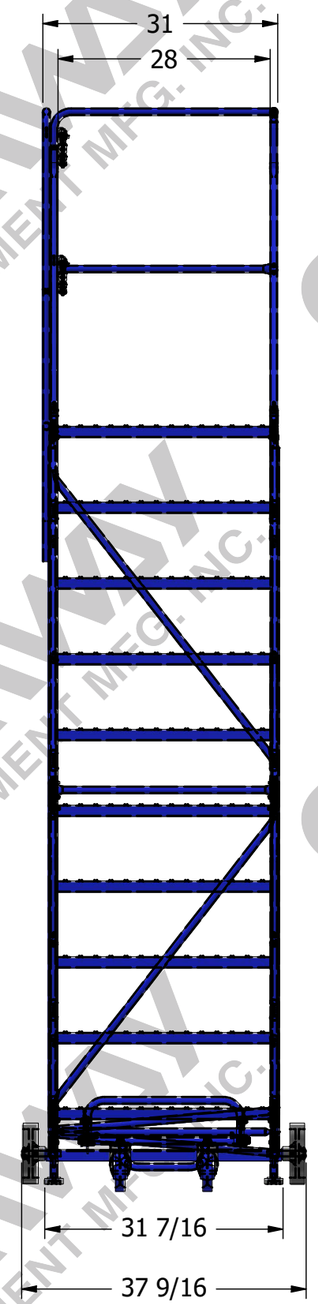

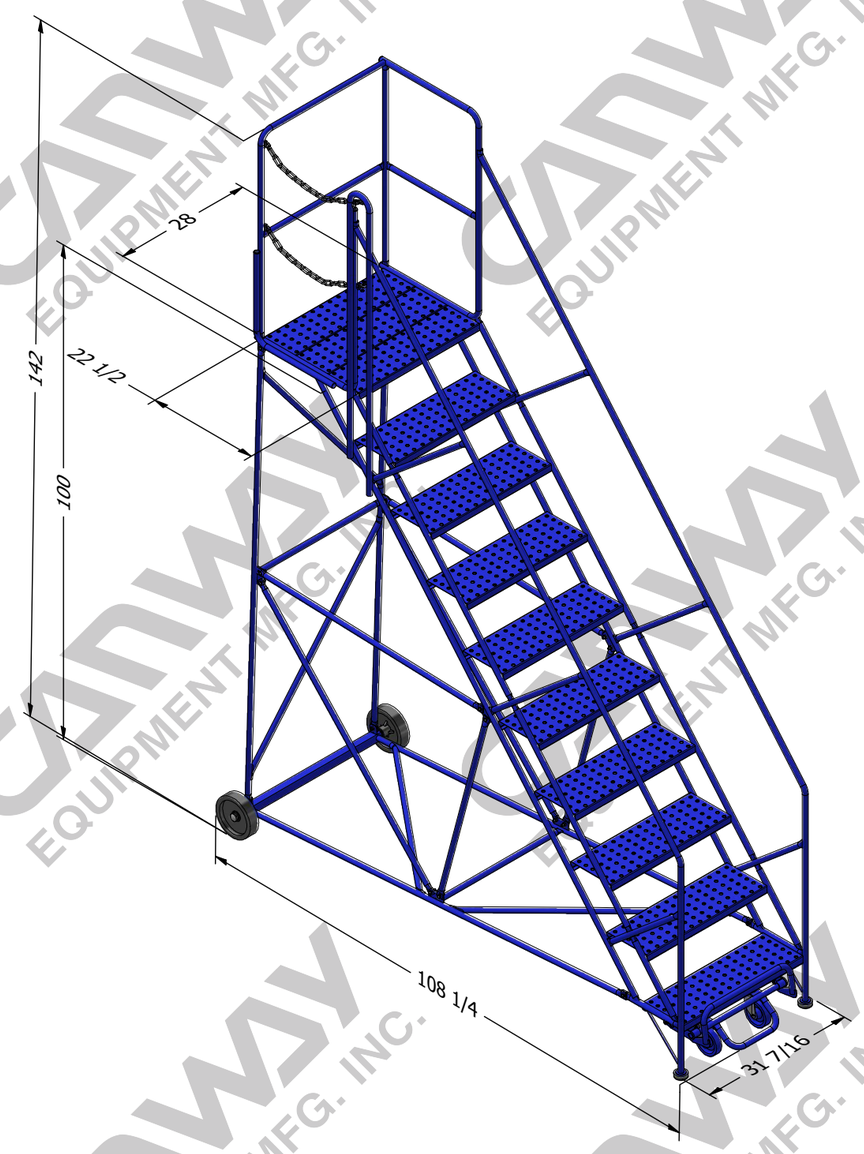

CANWAY EQUIPMENT MFG. INC.
WWW.CANWAYEQUIPMENT.COM SALES@CANWAYEQUIPMENT.COM
TEL: (905) 578-2929 FAX: (905) 578-5820
399 KENORA AVENUE, HAMILTON, ONTARIO L8E 2W3

Date: 9/17/2025	Part #	10SH-LWT-C

X:\CANWAY DRAWING\CANWAY JOB\NET\AutoDesk Files\LADDER NET\SH STYLE\SH\SH\10SH-LWT-C-NET.idw